OA05

Interactive optical smoke detector

- ***Standard EN54-7 Ed2000***
- ***Security addressing***
- **CE certified according to CPD**

The Optical smoke detector *analyzes an atmosphere by reflection of a light on the particles of smoke according to* ***TYNDALL effect****. It detects especially the* ***cold and visible smoke particles*** *(0,3µm to 2µm) produced in the early stages of a fire. The threshold of response of alarm is regulated to obtain the value m=0,2db/m±0,03 according to standard* ***EN54-7****.*
OA05 *includes a developed technology* ***(microprocessors, smd components)*** *which means precision and high reliability. A specific head detection fixed* ***by a single ceiling base****.*
OA05 *is dedicated to* ***interactive fire detection panels.***
The smoke detector ***OA05*** *is designed to be installed under flat ceiling with heights ranging between* ***2,5 m and 12 m*** *and this, in healthy and more or less ventilated buildings.*
The maximum supervised surface is ***80m² by detector****; however it is preferable to refer to the local rules of installation recommended in particular when the characteristics of the installation differ* ***from those stated above. Eight levels of sensitivity*** *are available while programming the fire detection panel (from 0,1dB/m to 0,35 dB/m).*



Main characteristics

- Photoelectric scattering (Tyndall effect)
- 1 remote alarm indicator output
- Lockable
- Standard EN54-7
- Cable section max 2,5mm²
- 8 levels sensitivity setting (0,1 dB/m to 0,35 dB/m)
- Base isolator (option)
- Base relay (option)
- **Constant sensitivity** thanks to auto correction

Power supply specification	
Main supply voltage	12Vdc to 28 Vdc
Nominal main supply voltage	24 Vdc
Quiescent current (24 Vdc)	140µA without base isolator / 240µA with base isolator
Alarm current (24 Vdc)	5mA ± 1mA
Fault current (24 Vdc)	140µA
Remote alarm indicator output	Individual command: 5mA ± 1mA
Mechanical characteristics	
Unit weight	130g
Unit dimensions (in mm)	H:55 D:104
IP index	IP 32
Unit row material	ABS
Unit colour	White
Mounting mode	Base
Fixing	- distance between centres: 50mm to 60mm - under ceiling: 2 screws Ø 4
Climatic characteristics	
Operating temperature	-30°C to +60°C
Storage temperature	+10°C to +50°C
Operating relative humidity	≤ 93%
Storage relative humidity	≤ 85%

OA05

Interactive optical smoke detector

CONNECTION

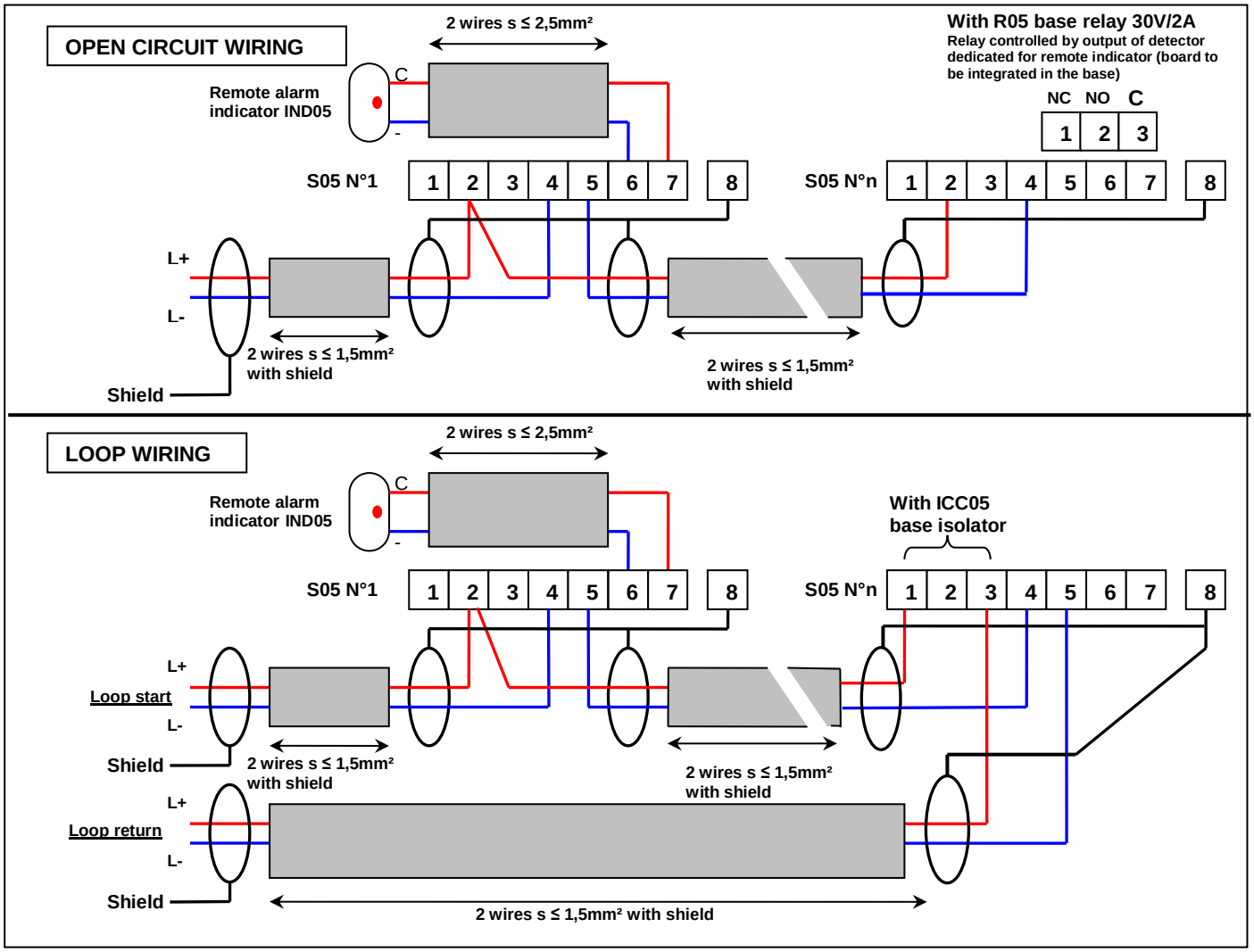

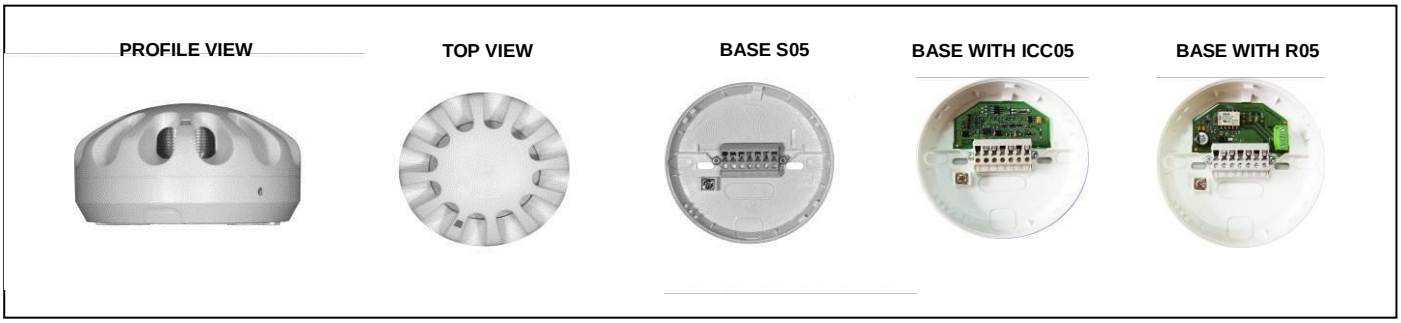

REFERENCE	***DESCRIPTION***
OA05	Interactive optical smoke detector
S05	Base detector

ACCESSORIES

IND05	Remote alarm indicator
SOUND05	Base with internal sounder 95dB
ICC05	Base isolator
STRAPP	Plug in connection board for 05 detectors
R05	Base relay
CS05	Protection plate for base S05
BRI	Universal base with gland holes for 05 detectors range
BRI/EM	Waterproof universal base with gland holes for 05 detectors range
GAV	Protection grid

Non contractual document

Security Detection Direct Distribution
41 rue du saule trapu, ZA du moulin de Massy
91300 MASSY (France)
Ind B

Tel : +33 (0)1 60 13 67 24
Fax : +33 (0)1 60 13 67 26
e-mail : sd3@sd3.net