TA05

Interactive heat detector

- ***Standard EN54-5 Ed2000***
- ***Security addressing***
- ***CE certified according to CPD***

TA05 *temperature heat detector analyzes the ambient temperature by the means of thermistor type CTN.*
TA05 is able to detect elevation of temperature corresponding to A1S, A2S, BS, A1R, A2R, and BR class *according to EN54-5 standard.*
The various levels of temperature are chosen while programming:
- Static temperature detector:

- ***TA05-A1S: static T°=62°C+5/-3°C***
- ***TA05-A2S: static T°=68°C+5/-3°C***
- ***TA05-BS: static T°=75°C+5/-3°C***

- Static + rate of rise temperature detector:

- ***TA05-A1R: static T°=62°C+5/-3°C***
- ***TA05-A2R: static T°=68°C+5/-3°C***
- ***TA05-BR: static T°=75°C+5/-3°C***

} ***ΔT°>3°C/min***
Thermal function is prevalent on rate of rise function.

TA05 *includes a developed technology* ***(microprocessors, smd components)*** *which means precision and high reliability. A specific head detection fixed* ***by a single ceiling base****.*
TA05 *is dedicated to* ***analogue fire detection panels.***
Temperature heat detectors are designed to be installed under flat ceiling with heights ranging between ***2,5 m and 6 m*** *(3,5m for A1S, A2S and BS class) in healthy and more or less ventilated buildings.*
The maximum supervised surface is ***35m² by detector****; however it is preferable to refer to the local rules of installation recommended in particular when the characteristics of the installation differ from those stated above.*



Main characteristics

- Static / Elevation of T°
- 1 remote alarm indicator output
- Lockable
- Standard EN54-5
- Cable section max 2,5mm²
- 6 levels sensitivity setting (62°C to 75°C)
- Base isolator (option)
- Base relay (option)

Power supply specification	
Main supply voltage	12Vdc to 28 Vdc
Nominal main supply voltage	24 Vdc
Quiescent current (24 Vdc)	140µA without base isolator / 240µA with base isolator
Alarm current (24 Vdc)	5mA ± 1mA
Fault current (24 Vdc)	140µA
Remote alarm indicator output	Individual command: 5mA ± 1mA
Mechanical characteristics	
Unit weight	130g
Unit dimensions (in mm)	H:55 D:104
Unit row material	ABS
Unit colour	White
IP rating	IP32
Mounting mode	Base
Fixing	- distance between centres: 50mm to 60mm - under ceiling: 2 screws Ø 4
Climatic characteristics	
Operating temperature	-30°C to +50°C (A1R, A2R, A1S, A2S) / -30°C to 65°C (BR, BS)
Storage temperature	+10°C to +50°C
Operating relative humidity	≤ 93%
Storage relative humidity	≤ 85%

TA05

Interactive heat detector

CONNECTION

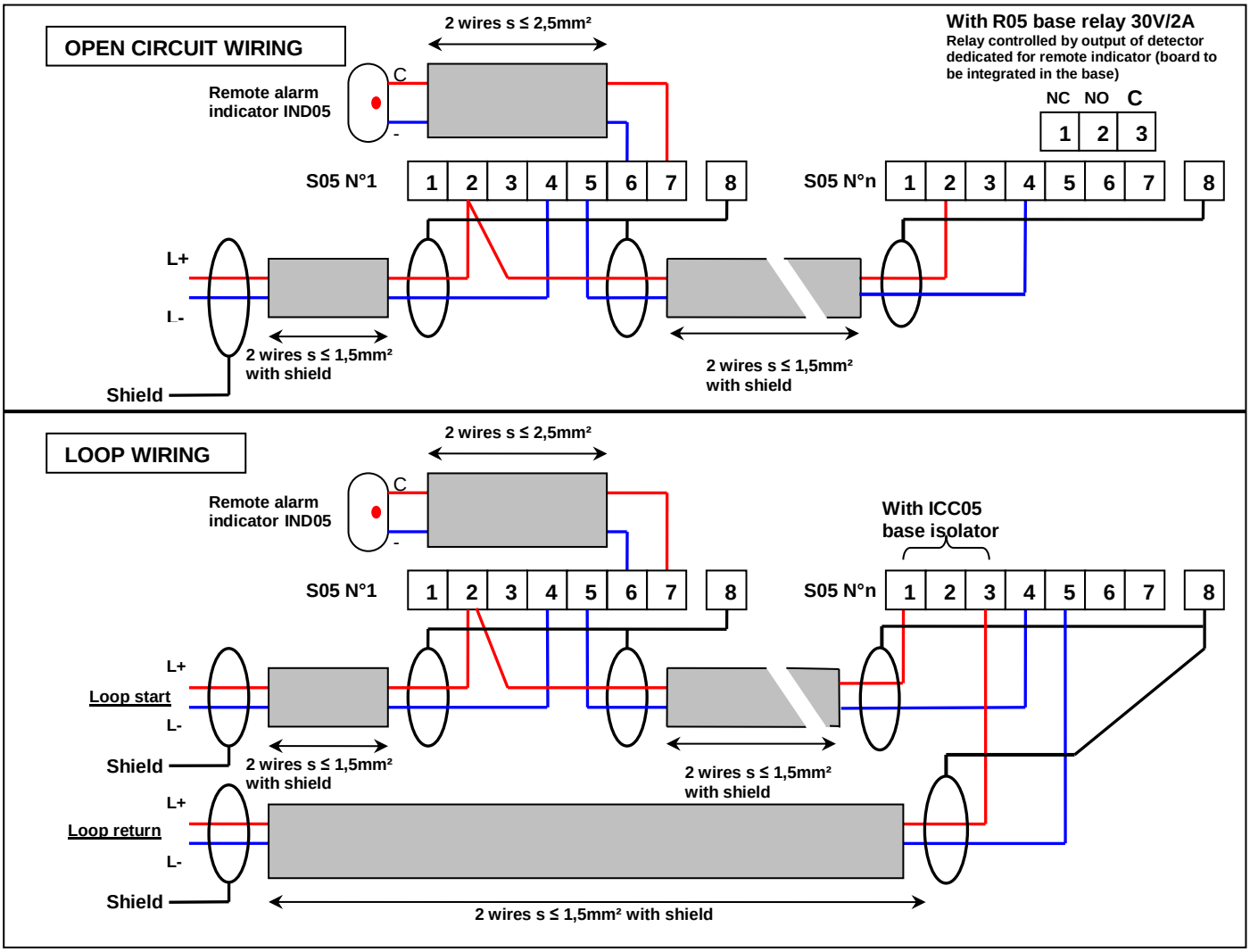

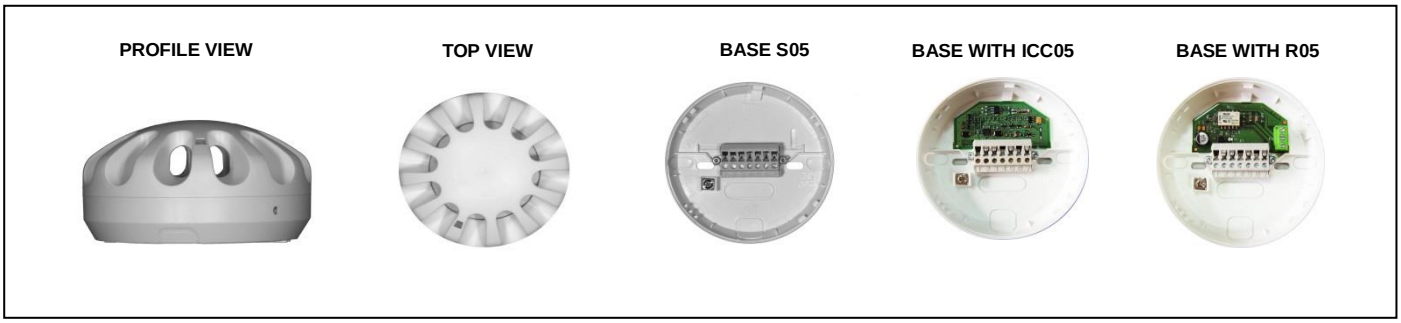

REFERENCE	***DESCRIPTION***
TA05	Interactive heat temperature detector
S05	Base detector
ACCESSORIES	
IND05	Remote alarm indicator
Sound05 + S05	Base with internal sounder 95dB
ICC05	Base isolator
R05	Base relay
STRAPP	Plug in connection board for cable ≥ 1,5mm²
CS05	Protection plate for base S05
BRI/EM + S05	Universal base with gland holes for 05 range
BRI + S05	Waterproof universal base with glands for 05 range
GAV	Protection grid

Non contractual document

Security Detection Direct Distribution
41 rue du saule trapu, ZA du moulin de Massy
91300 MASSY (France)
Tel : +33 (0)1 60 13 67 24
Fax : +33 (0)1 60 13 67 26
e-mail : sd3@sd3.net